NEMESIS AUDIO

POWER CLASS D FULL RANGE CAR AMPLIFIERS



NA-500X4D NA-1600X4D NA-1400X5D

User's Manual

NEMESIS AUDIO

INTRODUCTION

Congratulations on purchasing your **Nemesis Audio** Full Range Class D amplifier for your car audio system. Please read this manual thoroughly to ensure proper installation of your new amplifier for maximum performance.

- Double side FR-4 PCB, high quality SMT components.
- Full MOSFET circuit design.
- Adjustable low pass filter.
- Adjustable bass boost level
- Overload, short circuit, thermal, low voltage protection.
- Easy bridging operation.

TABLE OF CONTENTS

Amplifier Functions.....2
Pre Installation.....5
Troubleshooting.....12
Product Specifications.....13

NA-1400X5D

RMS POWER @ 4 OHM (THD<1% DISTORTION)	60W X4 & 250W X1
MAX POWER @ 4 OHM (THD<1% DISTORTION)	100W X4 & 500W X1
RMS POWER @ 2 OHM (THD<1% DISTORTION)	80W X4 & 400W X1
MAX POWER @ 2 OHM (THD<1% DISTORTION)	150W X4 & 800W X1
MAX POWER OUTPUT	1400W
Frequency Response	20Hz~20kHz
Signal To Noise Ratio	>90dB
THD	<1%
LPF	50Hz~250Hz
HPF	50Hz~1.2kHz
Bass Boost Level	0~12dB
Input Sensitivity Level	0.2 ~ 6 V
Best Efficiency	>80%
Minimum Load	2 Ohm
Current Draw	69A
Short Circuit Test (max. power)	PASS
Overload Protection System	YES
Overheat Protection Temperature	80℃/176℉
Components & PCB	SMT&Double Side Board
Dimension(LxWxH)	9.96x4.78x1.79 Inch

PRODUCT SPECIFICATIONS

NA-500X4D

RMS/MAX POWER @ 2 OHM (THD<1% DISTORTION)..... 4 X 75W RMS / 4X150W MAX
RMS/MAX POWER @ 4 OHM (THD<1% DISTORTION)..... 4 X 60W RMS / 4X125W MAX
BRIDGED RMS/MAX POWER @ 4 OHM (THD<1% DISTORTION)..2X150W RMS / 2X300W MAX
Frequency Response..... 20Hz~20kHz
Signal To Noise Ratio..... >90dB
THD..... <1%
LPF..... 35Hz~250Hz
HPF..... 35Hz~250Hz
Input Sensitivity Level.....0.5~12V
Current Draw..... 26A
Minimum Load.....4/8Ohm
Overload Protection System..... YES
Overheat Protection Temperature..... 70°C/158°F
Components & PCB..... SMT & Double Side Board
Dimension (L x W x H)..... 4.61x4.78x1.79 Inch

NA-1600X4D

RMS/MAX POWER @ 2 OHM (THD<1% DISTORTION) ..... 4X200W RMS / 4X400W MAX
RMS/MAX POWER @ 4 OHM (THD<1% DISTORTION)..... 4X130W RMS / 4X260W MAX
BRIDGED RMS/MAX POWER @ 4 OHM (THD<1% DISTORTION)..... 2X400W RMS / 2X800W MAX
Frequency Response..... 20Hz~20kHz
Signal To Noise Ratio..... >90dB
THD..... <1%
LPF..... 50Hz~250Hz
HPF..... 50Hz~250Hz
Bass Boost Level..... 0~12dB
Input Sensitivity Level..... 0.2~6V
Best Efficiency..... >80%
Minimum Load..... 2 Ohm
Current Draw..... 76A
Short Circuit Test (max. power) ..... PASS
Overload Protection System..... YES
Overheat Protection Temperature..... 80°C/176°F
Components & PCB..... SMT&Double Side Board
Dimension(LxWxH).....9.96x4.78x1.79 Inch

AMPLIFIER FUNCTIONS

NA-500X4D

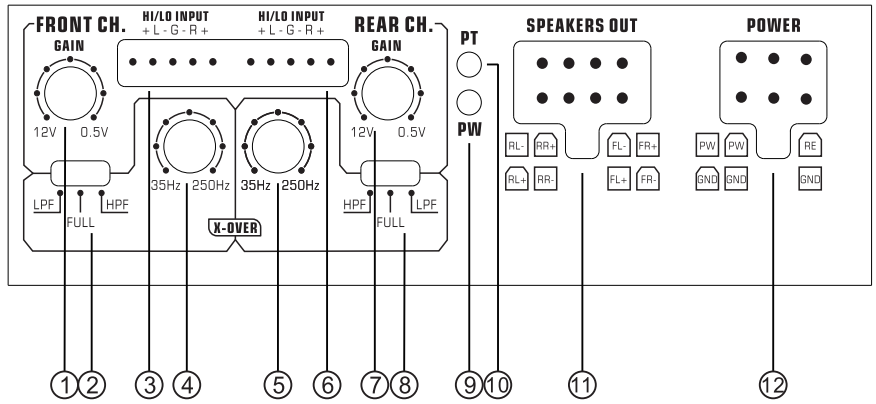

1.Fornt Gain Control
2.Cross Over Mode Switch
3.Front Audio Input
4.Front Filter Control Control
5.Rear Filter Control Control
6.Rear Audio Input
7.Rear Gain Control
8.Cross Over Mode Switch
9.Power Indicator LED
10.Circuit Protection Indicator LED
11.Speaker Output
12.Battery + 12V Input

NA-1600X4D

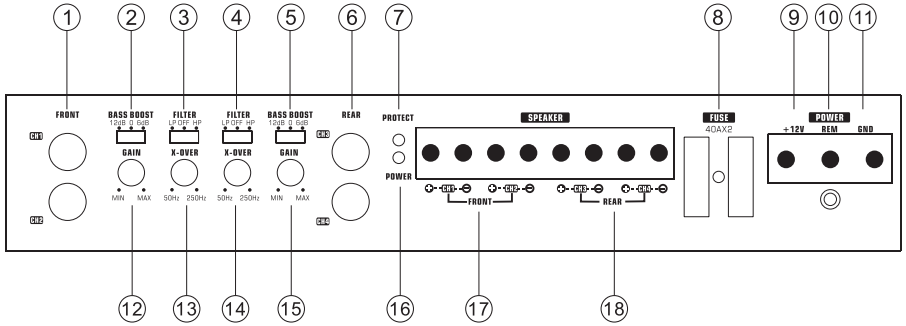

1.RCA Front Jacks

2.Front Bass Boost Select Switch

3.Front Filter Selection Switch

4.Rear Filter Selection Switch

5.Rear Bass Boost Selection Switch

6.RCA Rear Jacks

7.Circuit Protection Indicator LED

8.2x40Amp Fuse

9.Battery +12V Input

10.Remote Turn-on Input

11.Ground Input

12.Front Gain Control

13.Front X-OVER Control

14.Rear X-OVER Control

15.Rear Gain Control

16.Power Indicator LED

17.Front Speaker Output

18.Rear Speaker Output

TROUBLESHOOTING

Problem

Run indicator doesn't light up.

Solution

- Check all fuses on the amplifier.
- Check main fuse near the battery.
- Check plus and minus battery cables.
- Check remote voltage.

Problem

Run indicator is on but no sound.

Solution

- Check volume control on the radio.
- Check GAIN regulator on the amplifier.
- Check RCA cables and connections.
- Check speaker cables and connections.

Problem

Bass response is low.

Solution

- Check volume control on the radio.
- Check GAIN regulator on the amplifier.
- Check RCA cables and connections.
- Check speaker cables and connections.

Problem

The amplifier switches on and off.

Solution

Bad chassis ground connection with amplifier cable terminals and battery terminals are oxidized low voltage from the batter remote wire is connected wrong.

For additional questions please contact your authorized **Nemesis Audio** dealer.

5-Channel Full-Range Operation

NA-1400X5D

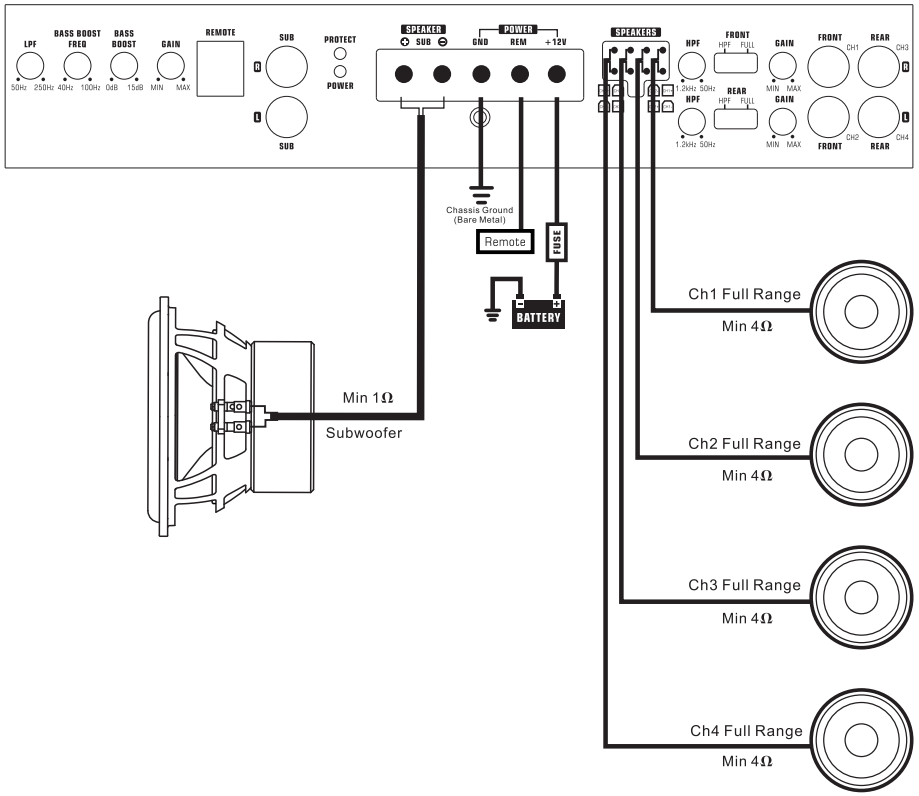

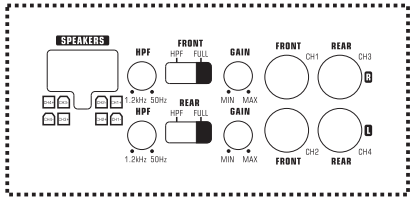

NA-1400X5D

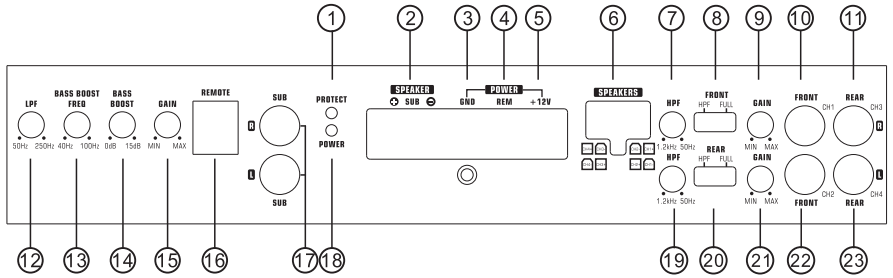

1. Circuit Protection Indicator LED
2. Speaker Connection
3. Ground Input
4. Remote Turn-on Input
5. Battery +12V Input
6. Speaker Output
7. High Pass Filter control
8. filter selection switch
9. Gain Control
10. CH1 RCA Input Jacks
11. CH3 RCA Input Jacks
12. Low Pass Filter Control
13. Bass Boost Frequency Control
14. Bass Boost Level
15. Gain Contro
16. Remote Control
17. SUB Output
18. Power Indicator LED
19. HPF Control
20. Filter Select Switch
21. Gain Control
22. CH2 RCA Input Jacks
23. CH4 RCA Input Jacks

PRE INSTALLATION

We recommend to have the installation done by an authorized **Nemesis Audio** dealer. Required power, ground wire and proper external fuse as below:

Model	Fuse	Wire
NA-500X4D	20AMP	8 Gauge
NA-1600X4D	80AMP	8 Gauge
NA-1400X5D	60AMP	8 Gauge

We recommend a fuse should be installed away 0.2m from the battery. The ground wire should be connected directly with the chassis of your vehicle which should be metal to metal ground point connection. The amplifier must be mounted securely at a solid, dry and low vibration surface in the trunk or passenger area. Fix the amplifier in an open air area to insure proper heat dissipation. Fix the amplifier in a place where can access easily to set the input controllers. Install all amplifier cables as far as possible from car electrical cables such as the car ignition cable.

IMPORTANT

Please make sure the negative speaker terminals of the two amplifiers are connected by the same gauge cables as the positive terminal being used.

4-Channel Full-Range and Subwoofer System

NA-1600X4D

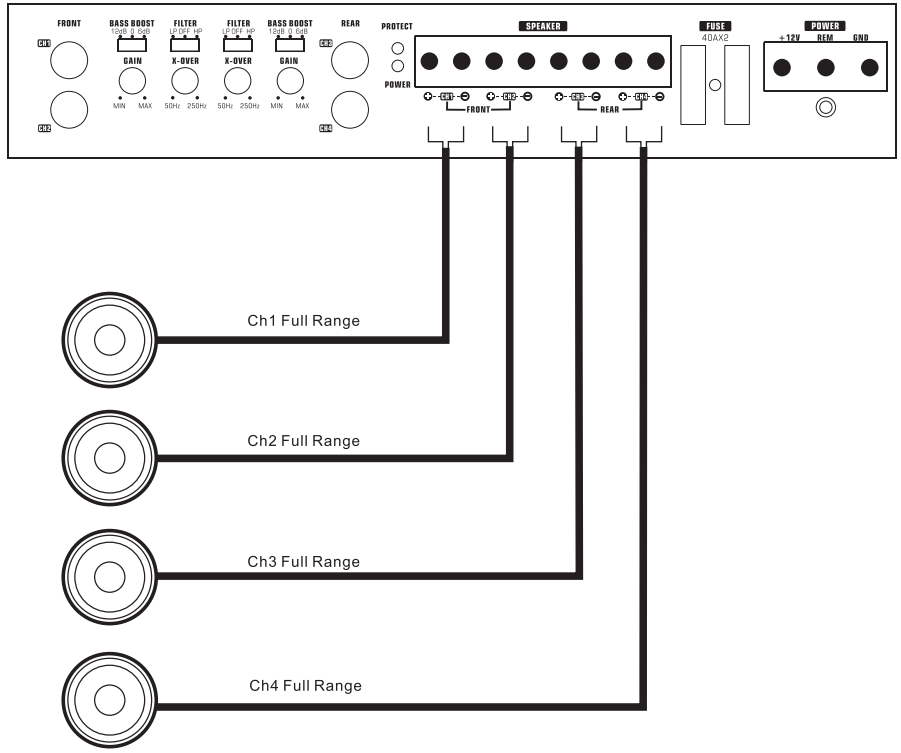

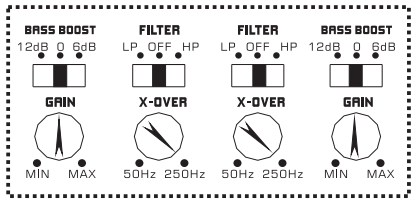

4-Channel Full-Range System

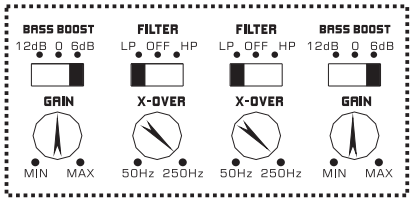

4-Channel Subwoofer System

2-Channel High Power System (Satellite or Subwoofer)

NA-1600X4D

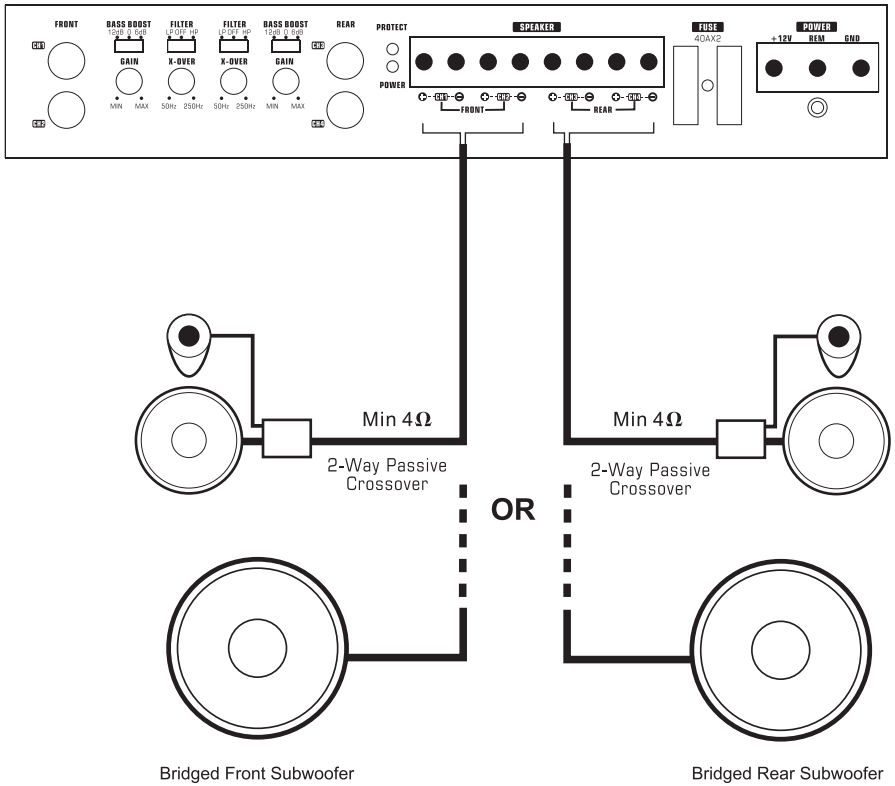

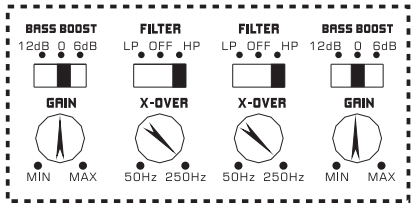

2 Channel High Power System Satellite

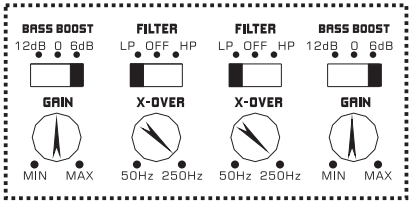

2 Channel High Power System Subwoofer

4-Channel Full-Range Operation

NA-500X4D

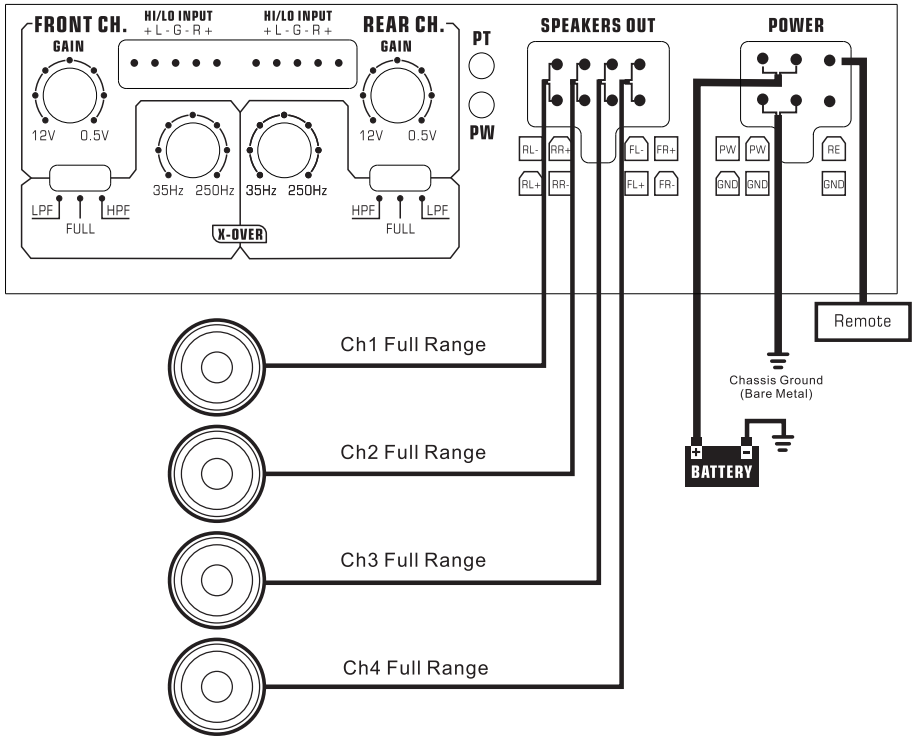

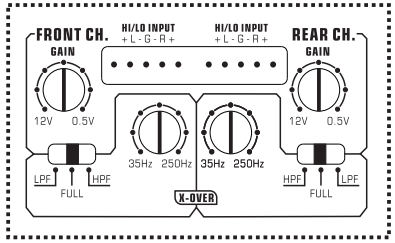

4-Channel Full-Range Operation

NA-1600X4D

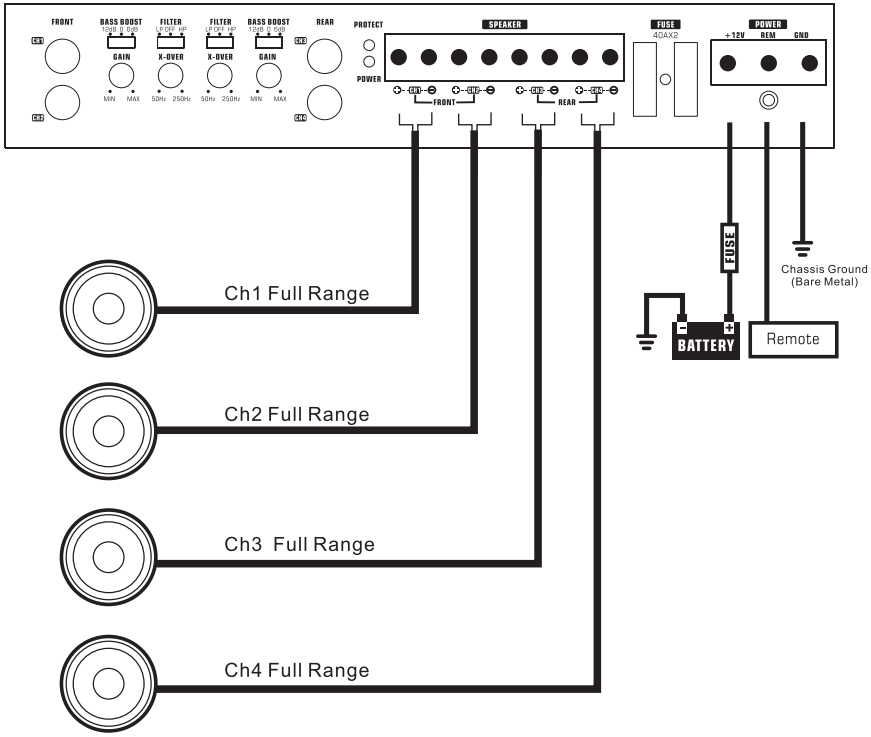

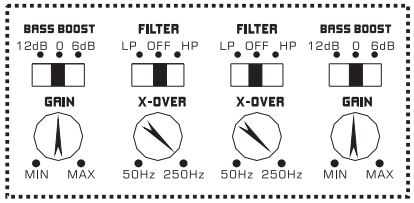

Bridged-Mono Subwoofer System

NA-1600X4D

